CITY OF MILPITAS
Building & Safety Department
455 E. Calaveras Blvd.
Milpitas, CA 95035
408-586-3240
www.ci.milpitas.ca.gov

RESIDENTIAL ROOF CONVERSION

1. PERMIT INFORMATION:

- ❑ The conversion of roof structure and/or its configuration requires a building permit.
- ❑ All changes in roof configuration and roofing materials (including color of material used) must be reviewed and approved by the Planning Department and the permit will have to be obtained in person at the Permit Center, 455 E. Calaveras Blvd.
- ❑ Refer to the *"Residential Re-roof"* handout for requirements on installing the new roof covering including the energy code requirements.
- ❑ **Home Owners Association:** If the property is regulated by a Home Owners Association, any exterior work must have written approval of the Association. It is the property owner's responsibility to obtain the approval.
- ❑ A Permit may be issued only to a State of California Licensed Contractor with the proper license classification or the Homeowner.
- ❑ If the work is performed by the Homeowner personally or by his/her workers, and an inspection indicates the work cannot be completed satisfactorily, then a licensed contractor must perform the work.
- ❑ If the Homeowner hires workers, State Law requires the Homeowner to obtain Worker's Compensation Insurance. Proof of this insurance is required prior to inspection.

2. PLAN REQUIREMETNS:

In order to expedite issuance of your permits, submit complete sets of plans, including all related disciplines. Incomplete submittals will cause delay in the approval of your project. If you have any questions, contact Building & Safety Department staff at City Hall or at the phone number above.

The following are guidelines for preparation and submittal of your plans. Specific plan requirements will depend largely upon the extent, nature and complexity of the work to be done. Some items listed below may not be required for your specific project. BE SURE TO INCLUDE ALL OF THE PERTINENT INFORMATION AND DRAWINGS:

- ❑ **Plan Size:** Prepare plans on paper that is at least 22 inches x 17 inches in size.
- ❑ **Sets of Plans:** Submit five (5) complete sets of plans.
- ❑ **Clarity:** All plans shall be prepared to be sufficiently readable and clear for creating a digitized record. Plans shall be quality blue or black ink line drawings with uniform light (white) background color. Pencil drawings are not acceptable, but copies of pencil drawings can be submitted provided copies are readable with good contrast.
- ❑ **Dimensions:** Plot Plans, Floor Plans and other plan view drawings shall be fully dimensioned and shall have a north arrow.

- ❑ **Scale:** All drawings shall be drawn to an adequate scale with scale indicated. Recommended scales for drawings are:

Plot Plans:	1/8" = 1'-0", 1"=10' or 1"=20'	Floor and Roof Framing:	1/4" = 1'-0" or 1/8" = 1'-0"
Floor Plans:	1/4" = 1'-0"	Building Cross Sections:	1/4" = 1'-0" or 1/2" = 1'-0"
Foundation Plans:	1/4" = 1'-0" or 1/8" = 1'-0"	Exterior Elevations:	1/8" = 1'-0" or 1/4" = 1'-0"

- ❑ **Existing (E) and New (N) Construction:** Throughout the plans, be sure to label all new (N) and existing (E) construction, components and fixtures to distinguish between new work to be done and the existing work.

- ❑ **Completeness:** Please remember, <u>the more complete and accurate the drawings</u> and submittal documents, <u>the sooner your permits can be issued.</u>

- ❑ **Signature:** The person who prepared the plans must sign each sheet. If any of the plan sheets are prepared by a licensed architect or engineer, that individual must stamp and sign at least two copies of each of the sheets he or she has prepared in accordance with the California Business and Professions Code prior to plan approval. Plans for elements of the structure designed by others must be reviewed and signed by the Engineer or Architect of record. [California Business and Professional Code 5536.1, 6735]

2. <u>PROJECT INFORMATION</u> - On the <u>first sheet</u> of the plans, provide the following information:

- ❑ **Name of Architect, Engineer or Designer:** The printed name, address and telephone number of the person who prepared the plans.

- ❑ **Address and Owner:** List the street address of the property and the name of the legal owner of the property.

- ❑ **An Index of the Drawings:** List each sheet number and a description in an Index of the Drawings.

- ❑ **Scope of Work:** State the complete scope of work to be performed under this permit.

- ❑ **Building Area:** State the area in square feet of the existing house, the area to be added and/or remodeled, and the total of the existing and new area.

- ❑ **Deferred Submittals:** List all proposed deferred submittals (e.g. roof trusses, prefabricated stairs, etc.). Deferred submittal documents shall be reviewed by the Architect or Engineer of record with a notation indicating that the documents have been reviewed and are in general conformance with the design of the building prior to being submitted to the City for approval.

- ❑ **Building Codes:** All work must comply with the 2013 California Residential Code (CRC) or 2013 California Building Code, 2013 California Electrical Code (CEC), 2013 California Mechanical Code (CMC), 2013 California Plumbing Code (CPC), 2013 California Energy Code, 2013 California Green Building Code and 2014 Milpitas Municipal Code (MMC).

3. <u>ARCHITECTURAL PLANS</u> - The following are minimum architectural plan requirements for most projects:

- ❑ **Site (Plot) Plan:** Show the location of the existing building.

- ❑ **Roof Plan:** Show a plan view of the roof.

  - Indicate roof slope, roof slope direction, existing and proposed roofing materials and it's fire-resistive classifications.

- Show the location and construction details of all skylights. Include the skylights in the Title 24 Energy Compliance Reports. Refer to the "*Residential Skylights*" handout for additional information.

- Show the roof covering materials to be used. Refer to the *"Residential Re-roof"* handout for additional information.

- Show location and type of rain water gutters and down spouts. Show where water will be disposed. Water must be directed to landscaping.

- Show location and height of existing fireplace chimneys. If they need to be raised to be a minimum of 2 feet higher than any portion of the roof within a radius of 10 feet, but not less than 3 feet above where the chimney passes through the roof, detail how this is t be done. Refer to the *"Brick, Masonry & Pre-cast Fireplace Reconstruction"* handout for additional information. (CRC R1003.9)

- Provide cross ventilation calculations for enclosed attics and each enclosed rafter space. Ventilating area shall not be less than 1/150 of the area of the ventilated space, or may be 1/300 if at least 40% and not more than 50% of the required ventilating area is provided by ventilators located in the upper portion of the attic or rafter space. Upper ventilators shall be located no more than 3 feet below the ridge or highest point of space, measured vertically, with the balance of the required ventilation provided by eave or cornice vents. Where the location of wall or roof framing members conflicts with the installation of upper ventilators, installation more than 3 feet below the ridge or highest point of the space shall be permitted. Where eave or cornice vents are installed, insulation shall not block the free flow of air. A minimum of a 1 inch space shall be provided between the insulation and the roof sheathing and at the location of the vent. (CRC R806)

- Show location and size of the attic access. Buildings with combustible ceiling or roof construction shall have an attic access opening to attic areas that exceed 30 square feet and have a vertical height of 30 inches or greater. The vertical height shall be measured from the top of the ceiling framing members to the underside of the roof framing members. The rough-framed opening shall not be less than 22 inches by 30 inches and shall be located in a hallway or other readily accessible location. When located in a wall, the opening shall be a minimum of 22 inches wide by 30 inches high. When the access is located in a ceiling, minimum unobstructed headroom in the attic space shall be 30 inches at some point above the access measured vertically from the bottom of ceiling framing members. See the California Mechanical Code for accdss requirements where mechanical equipment is located in attics. (CRC 807.1)

❑ **Details and Notes:** Include all construction details and notes to explain the planned construction.

4. STRUCTURAL PLANS:

❑ **Foundation Plan:** If there are new posts added to support new roof beams and the new posts do not rest on existing foundation below, provide a foundation plan to show the new footing required. Indicate the type of the new footing, and size and depth of footings or piers and grade beams. Include a dimensioned foundation plan with sufficient details to clearly show foundation construction. New foundations must match the existing foundation type. For example, if the original foundation is a pier and grade beam type, the new foundation must also be a pier and grade beam type. Otherwise, the foundation must be an engineered system prepared by a registered engineer with a soils report, except additions to R3 occupancies without an available soils report and where the existing foundation system is a standard "T" type or a pier and grade beam type, may be constructed in accordance with MMC Section II-3-2.13 at the option of the property owner (refer to separate handout "Residential Concrete Foundation" for more information). All foundation designs in Hillside areas shall be designed and prepared by a civil or structural engineer licensed in the State of California and require a soils report.

- ❑ **Roof Framing Plan:** Show size and location of roof beams, roof rafter and ceiling joist span and sizes, overhangs and details and indicate any modifications of the existing roof plan. Indicate roof sheathing thickness and grade and nailing requirements.

- ❑ **Pre-Fabricated Roof Trusses:** If trusses are to be used, provide 2 copies of the truss shop drawings, layout plan and calculations with the engineers stamp and wet signature, reviewed and signed approved by the project architect or engineer. If shop drawings are not submitted for review prior to issuance of the building permit, it shall be noted on the first page of the drawings the truss shop drawings will be a deferred submittal. The deferred submittal will require payment for an additional two hours of plan check review time. Submit the truss drawings for review at least two weeks prior to fabrication of the trusses.

- ❑ **Structural Details and Notes:** Provide structural details such as how new roof is connected to the walls, connected to existing roof (if occurs), post-to-beam connections, framing details, shear transfer from roof to wall details, material notes and specifications.

- ❑ **Structural Calculations:** Structural calculations are required for building components, including for vertical load carrying members, which do not meet "Conventional Construction" rules as defined in the California Building Code and the Milpitas Municipal Code. If calculations are required, they must be stamped and signed by a California licensed architect or registered engineer. Calculations must be numbered by page and indexed for complex projects.

5. <u>ENERGY REQUIREMENTS:</u>

- ❑ **Insulation:** Show on the plans the insulation to be installed. Ceilings and rafter roofs shall be insulated between wood-framing members with insulation resulting in an installed thermal resistance of R-30 or greater for the insulation alone. EXCEPTION: Insulation of rafter roofs in an alteration shall be insulated between wood-framing members with insulation resulting in an installed thermal resistance of R-19 or greater. (CEnC 150.0(a)1)

  - 150.0(a)1 Attic access doors shall have permanently attached insulation using adhesive or mechanical fasteners. The attic access shall be gasketed to prevent air leakage.

  - 150.0(b) When loose-fill insulation is installed, the minimum installed weight per square foot shall conform with the insulation manufacturer's installed design weight per square foot at the manufacturer's labeled R-value.

  - 110.0 Insulation may be installed in a building only if the manufacturer has certified that the insulation complies with the applicable manufacturing provisions and installation provisions of Section 110.8.

  - 110.8(a) All insulation shall be certified by Department of Consumer Affairs, Bureau of Home Furnishing and Thermal Insulation that the insulation conductive thermal performance is approved pursuant to the California Code of Regulations, Title 24, Part 12, Chapters 12-13, Article 3, "Standards for Insulating Material."

  - 110.8(b) Urea formaldehyde foam insulation may be applied or installed only if:

    1. It is installed in exterior side walls; and
    2. A four-mil-thick plastic polyethylene vapor retarder or equivalent plastic sheathing vapor retarder is installed between the urea formaldehyde foam insulation and the interior space in all applications.

  - 110.8(c) All insulating material shall be installed in compliance with the flame spread rating and smoke density requirements of the CBC:

R302.10 Flame spread and smoke-developed index for insulation shall be in accordance with Sections R302.10.1 through R302.10.5.

R302.10.1 Insulation materials, including facings, such as vapor retarders and vapor-permeable membranes installed within floor/ceiling assemblies, roof/ ceiling assemblies, wall assemblies, crawl spaces and attics shall have a flame spread index not to exceed 25 with an accompanying smoke-developed index not to exceed 450 when tested in accordance with ASTM E 84 or UL 723.

Exceptions:

1. When such materials are installed in concealed spaces, the flame spread index and smoke-developed index limitations do not apply to the facings, provided that the facing is installed in substantial contact with the unexposed surface of the ceiling, floor or wall finish.
2. Cellulose loose-fill insulation, which is not spray applied, complying with the requirements of Section R302.10.3, shall only be required to meet the smoke-developed index of not more than 450.
3. Foam plastic insulation shall comply with Section R316.

R302.10.2 Loose-fill insulation materials that cannot be mounted in the ASTM E 84 or UL 723 apparatus without a screen or artificial supports shall comply with the flame spread and smoke-developed limits of Section R302.10.1 when tested in accordance with CAN/ULC S102.2.

Exception: Cellulose loose-fill insulation shall not be required to be tested in accordance with CAN/ULC S102.2, provided such insulation complies with the requirements of Section R302.10.1 and Section R302.10.3.

R302.10.3 Cellulose loose-fill insulation shall comply with CPSC 16 CFR, Parts 1209 and 1404. Each package of such insulating material shall be clearly labeled in accordance with CPSC 16 CFR, Parts 1209 and 1404.

R302.10.4 All exposed insulation materials installed on attic floors shall have a critical radiant flux not less than 0.12 watt per square centimeter.

R302.10.5 Tests for critical radiant flux shall be made in accordance with ASTM E 970.

- 110.8(d) Insulation installed in an existing attic, or on an existing duct or water heater, shall comply with the applicable requirements below. If a contractor installs the insulation, the contractor shall certify to the customer, in writing, that the insulation meets the applicable requirements.

  1. Attics. If insulation is installed in the existing attic of a low-rise residential building, the R-value of the total amount of insulation (after addition of insulation to the amount, if any, already in the attic) shall meet the requirements of Section 150.0(a).
     EXCEPTION to Section 110.8(d)1: Where the accessible space in the attic is not large enough to accommodate the required R-value, the entire accessible space shall be filled with insulation provided such installation does not violate Section 1203.2 of Title 24, Part 2.

- 110.8(e) Insulation Placement on Roof/Ceilings. Insulation installed to limit heat loss and gain through the top of conditioned spaces shall comply with the following:

  1. Insulation shall be installed in direct contact with a continuous roof or ceiling which is sealed to limit infiltration and exfiltration as specified in Section 110.7, including but not limited to placing insulation either above or below the roof deck or on top of a drywall ceiling; and
  2. When insulation is installed at the roof in nonresidential buildings, fixed vents or openings to the outdoors or to unconditioned spaces shall not be installed and the space between the ceiling and the roof is either directly or indirectly conditioned space and shall not be considered an attic for the purposes of complying with CBC attic ventilation requirements; and

4. Insulation shall be installed below the roofing membrane or layer used to seal the roof from water penetration unless the insulation has a maximum water absorption of 0.3 percent by volume when tested according to ASTM Standard C272.

NOTE: Vents, that do not penetrate the roof deck, that are designed for wind resistance for roof membranes are not within the scope of Section 110.8(e)2.

- ❑ **Sealing:** All joints, penetrations and other openings in the building envelope that are potential sources of air leakage shall be caulked, gasketed, weather stripped, or otherwise sealed to limit infiltration and exfiltration (CEnC 110.7).

- ❑ **Radiant Barrier:** Show on the plans that a radiant barrier is to be installed below the roof deck in the attic, and on the gable ends. The most common installation method is to use roof sheathing with a barrier bonded to it by the manufacturer. The sheathing is installed with the barrier facing down towards the attic. Alternatively, a barrier material can be draped over the top of the rafters or trusses before the sheathing is installed, or can be stapled between or underneath the rafters or top chords of the trusses after the sheathing is installed. A radiant barrier shall have an emittance of 0.05 or less, tested in accordance with ASTM C1371 or ASTM E408, and shall be certified to the Department of Consumer Affairs as required by Title 24, Part12, Chapter 12-13, Standards for Insulating Material and shall meet the installation criteria specified in the Reference Residential Appendix RA4 [CNeC 110.8(j) and 150.1(c)2, Compliance Manual Section 3.8.2B]

- ❑ **Title 24 Energy Compliance Reports:**

  - The following forms must be filled out and submitted with the permit application
    - Certificate of Compliance form CF1R-ALT-01 Prescription Alterations

  - The following forms must be completed by the installer(s) prior to final:
    - Certificate of Installation form CF-2R-ENV-03 Insulation Installation
    - Certificate of Installation form CF-2R-ENV-04 Roofing-Radiant Barrier

6. SMOKE ALARMS, CARBON MONOXIDE ALARMS & SPARK ARRESTERS:

- ❑ In single family and multi-family residences (including townhomes, condominiums and apartments), installation of smoke alarms, carbon monoxide alarms and spark arresters is required prior to the final inspection as follows:

  Smoke Alarms shall be listed and labeled in accordance with UL 217 and installed in accordance with the provisions of the code and the household fire warning equipment provisions of NFPA 72. Systems and components shall be California State Fire Marshal listed and approved. Alarms shall be tested and maintained in accordance with the manufacturer's instructions. Alarms that no longer function shall be replaced. Conventional ionization smoke alarms that are solely battery powered shall be equipped with a ten-year battery and have a silence feature. **Alarms installed in one and two-family dwellings shall be replaced after 10 years from the date of manufacture marked on the unit, or if the date of manufacture cannot be determined.** (CRC R314)

  Smoke detection systems. Household fire alarm systems installed in accordance with NFPA 72 that include smoke alarms, or a combination of smoke detector and audible notification device installed as required for smoke alarms, shall be permitted. The household fire alarm system shall provide the same level of smoke detection and alarm as required for smoke alarms. Where a household fire warning system is installed using a combination of smoke detector and audible notification device(s), it shall become a permanent fixture of the occupancy and owned by the homeowner. The system shall be monitored by an approved supervising station and be maintained in accordance with NFPA 72.

Location. Smoke alarms shall be installed in each sleeping room, outside each separate sleeping area in the immediate vicinity of the bedrooms and on each story of the dwelling. In dwellings or dwelling units with split levels and without an intervening door between the adjacent levels, a smoke alarm installed on the upper level shall suffice for the adjacent lower level provided that the lower level is less than one full story below the upper level. Apartment complexes and other multiple-dwelling complexes shall have a smoke detector installed in the common stairwells. For R-3.1 occupancies (Residential Care Facilities), refer to CBC Section 907.2.11.2. The installation of smoke alarms and smoke detectors shall also comply with the following requirements:

1. Smoke alarms shall not be located within unfinished attics or garages or in other spaces where temperatures can fall below 40°F or exceed 100°F.
2. Where the mounting surface could become considerably warmer or cooler than the room, such as a poorly insulated ceiling below an unfinished attic or an exterior wall, alarms shall be mounted on an inside wall.
3. Smoke alarms shall be installed not less than a 3 foot horizontal distance from the door or opening of a bathroom that contains a bathtub or shower unless this would prevent placement of a smoke alarm required by the code.
4. Smoke alarms shall not be installed within a 36 inch horizontal path from the supply registers of a forced air heating or cooling system and shall be installed outside of the direct airflow from those registers.
5. Smoke alarms shall be installed a minimum of 20 feet horizontal distance from a permanently installed cooking appliance, except Ionization smoke alarms with an alarm-silencing switch or Photoelectric smoke alarms shall be permitted to be installed 10 feet or greater from a permanently installed cooking appliance and Photoelectric smoke alarms shall be permitted to be installed greater than 6 feet from a permanently installed cooking appliance where the kitchen or cooking area and adjacent spaces have no clear interior partitions and the 10 foot distances would prohibit the placement of a required smoke alarm or smoke detector. Smoke alarms listed for use in close proximity to a permanently installed cooking appliance can be installed in accordance with their listing.
6. Smoke alarms shall not be installed within a 36 inch horizontal path from the tip of the blade of a ceiling- Smoke alarms shall not be located where ambient conditions, including humidity and temperature, are outside the limits specified by the manufacturer's published instructions.
7. Suspended (paddle) fan.
8. Where stairs lead to other occupied levels, alarm shall be located so that smoke rising in the stairway cannot be prevented from reaching the alarm by an intervening door or obstruction.
9. For stairways leading up from a basement, alarms shall be located on the basement ceiling near the entry to the stairs.
10. For tray-shaped ceilings (coffered ceilings), alarms shall be installed on the highest portion of the ceiling or on the sloped portion of the ceiling within 12 inch vertically down from the highest point.
11. Smoke alarms installed in rooms with joists or beams shall comply with the requirements of NFPA 72, Section 17.7.3.2.4.
12. Heat alarms and detectors installed in rooms with joists or beams shall comply with the requirements of NFPA 72, Section 17.6.3.

Carbon Monoxide Alarms: An approved carbon monoxide alarm listed as complying with UL 2034, approved and listed by the California State Fire Marshal, installed and maintained in accordance with NFPA 720 and the manufacturer's instructions shall be installed if they do not already exist in existing dwellings or sleeping units having a fossil fuel-burning heater or appliance, fireplace or an attached garage as follows: **outside each separate dwelling unit sleeping area in the immediate vicinity of bedroom(s) and on every level of dwelling unit.** Carbon monoxide detection systems that include carbon monoxide detectors and audible notification appliances, installed and maintained as required for carbon monoxide alarms and NFPA 720 shall be permitted. The carbon monoxide detectors shall be listed as complying with UL 2075. (CRC R315)

Power supply: Smoke and carbon monoxide alarms shall receive their primary power from the building wiring and shall be equipped with a battery back-up. Smoke alarms with integral strobes that are not equipped with battery backup shall be connected to an emergency electrical system. Smoke alarms shall emit a signal when the batteries are low. Smoke and carbon monoxide alarm wiring shall be directly connected to the permanent building wiring without a disconnecting switch other than as required for overcurrent protection. Smoke and carbon monoxide alarms are permitted to be solely battery operated (carbon monoxide alarms can also be plug-in with battery back-up) in existing buildings where no construction is taking place; in existing areas of buildings undergoing alterations or repairs that do not result in the removal of interior walls or ceiling finishes exposing the structure unless there is an attic or crawl space available which could provide access for building wiring without the removal of interior finishes; where repairs or alterations are limited to the exterior surfaces of dwellings, such as the replacement of roofing or siding, or the addition or replacement of windows or doors, or the addition of a porch or deck; or when work is limited to the installation, alteration or repairs of plumbing or mechanical systems or the installation, alteration or repair of electrical systems which do not result in the removal of interior wall or ceiling finishes exposing the structure: and, for carbon monoxide alarms, when other power sources recognized for use by NFPA 720 are used.

Interconnection: Where more than one smoke or carbon monoxide alarm is required to be installed within an individual dwelling or sleeping unit, the alarms shall be interconnected in such a manner that the activation of one alarm will activate all of the alarms in the individual unit, except interconnection is not required in buildings that are not undergoing alterations, repairs or construction of any kind; where alterations or repairs do not result in the removal of interior wall or ceiling finishes exposing the structure unless there is an attic or crawl space available which could provide access for interconnection without the removal of interior finishes and no previous method for interconnection existed; where repairs or alterations are limited to the exterior surfaces of dwellings, such as the replacement of roofing or siding, or the addition or replacement of windows or doors, or the addition of a porch or deck; or when work is limited to the installation, alteration or repairs of plumbing or mechanical systems or the installation, alteration or repair of electrical systems which do not result in the removal of interior wall or ceiling finishes exposing the structure. The alarm shall be clearly audible in all bedrooms over background noise levels with all intervening doors closed.

Spark arresters: When a permit has been issued and the value of the work exceeds $1,000, a spark arrester must be installed on all fireplace chimneys, if one does not already exist, per MMC Section II-3-2.06. Spark arresters shall be constructed in conformance with CRC Section 1003.9.2.

7. WATER CONSERVING FIXTURES:

- ❑ When required, all non-compliant plumbing fixtures must be replaced. Refer to the attached *"Water Conserving Certificate of Compliance"* handout for details on when this is required.

7. OTHER CITY DEPARTMENTS:

- ❑ **Planning Division:** Prior to completion of any plans, the Planning Division should be contacted at (408) 586-3279 to find out the requirements due to the location and type of the proposed project.

- ❑ **Fire Department:** Homes in "Hillside Areas" and all homes with fire sprinklers shall also be approved by the Fire Department. Contact the Fire Department for more information at (408) 586-3370.

Note: All plan submittals for the above Departments are made through the Building Department at the Permit Center with the building permit application.

NOTES:

- ❑ If one or more of the required items mentioned above are omitted from the submittal plans, the application may be considered as incomplete and not ready for checking or approving.

DIAGRAM A - VENTILATION FOR GABLE ROOF WITH ATTIC

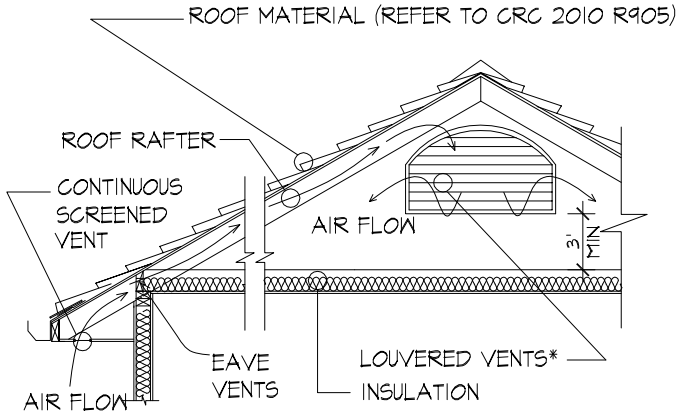

CRC 2010 Sec. R806.2 Minimum area.
The total net free ventilating area shall not be less than 1/150 of the area of the space ventilated except that reduction of the total area to 1/300 is pennitted provided that at least 50 percent and not more than 80 percent of the required ventilating area is provided by ventilators located in the upper portion of the space to be ventilated at least 3 feet above the eave or cornice vents with the balance of the required ventilation provided by eave or cornice vents. As an alternative, the net free cross-ventilation area may be reduced to 1/300 when a Class I or II vapor barrier is installed on the warm-in-winter side of the ceiling.

CRC 2010 Sec. R806.3 Vent and insulation clearance.
Where eave or cornice vents are installed, insulation shall not block the free flow of air. A minimum of a 1-inch space shall be provided between the insulation and the roof sheathing and at the location of the vent.

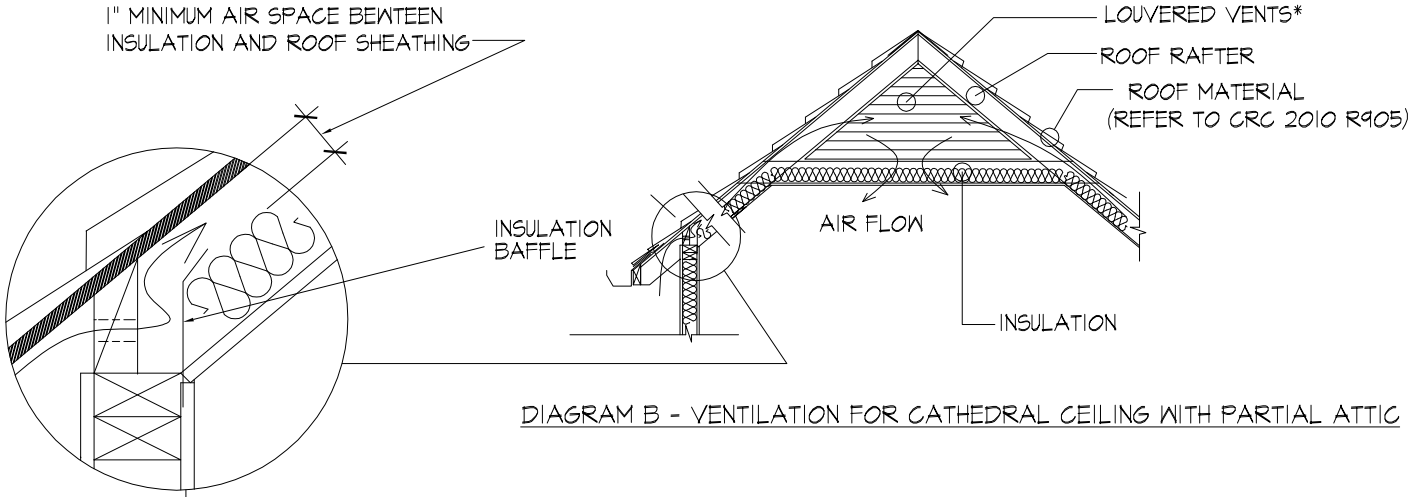

DIAGRAM B - VENTILATION FOR CATHEDRAL CEILING WITH PARTIAL ATTIC

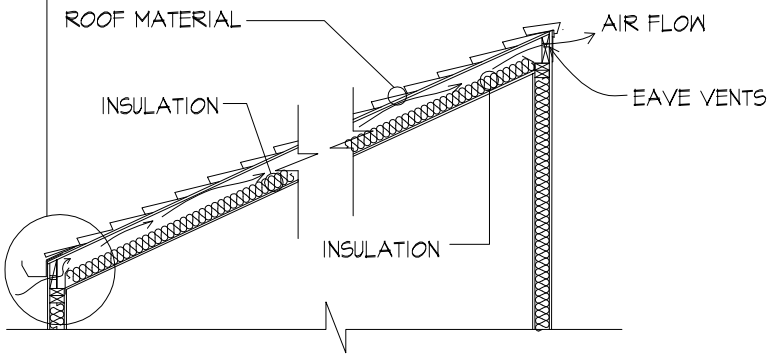

DIAGRAM C - VENTILATION FOR SHED ROOF

*VERIFY WITH ENGINEER FOR VENT LOCATION AS SHOWN

REV.	DATE	BY:	SCALE: N.T.S	City of Milpitas BUILDING AND SAFETY DEPARTMENT ROOF / ATTIC VENTILATION	SHEET 1 OF 1 SHEETS
1	01/2011	BK	DATE: JUN 2009		
			DRAWN BY: Henry R.		
			REVIEWED BY: LEON SHEYMAN		

Santa Clara Valley
Urban Runoff
Pollution Prevention Program

Requirements for Copper Roofs and Other Architectural Copper

Protect water quality during installation, cleaning, treating, and washing!

Copper from Buildings May Harm Aquatic Life

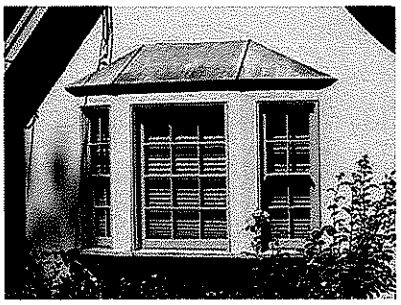

Copper can harm aquatic life in San Francisco Bay. Water that comes into contact with architectural copper may contribute to impacts, especially during installation, cleaning, treating, or washing. Patination solutions that are used to obtain the desired shade of green or brown typically contain acids. After treatment, when the copper is rinsed to remove these acids, the rinse water is a source of pollutants. Municipalities prohibit discharges to the storm drain of water used in the installation, cleaning, treating or washing of architectural copper.

Use Best Management Practices (BMPs)

The following Best Management Practices (BMPs) must be implemented to prevent prohibited discharges to storm drains.

During Installation

- If possible, purchase copper materials that have been pre-patinated at the factory.
- If patination is done on-site, implement one or more of the following BMPs:
  - Discharge the rinse water to landscaping. Ensure that the rinse water does not flow to the street or storm drain. Block off storm drain inlet if needed.
  - Collect rinse water in a tank and pump to the sanitary sewer. Contact your local sanitary sewer agency before discharging to the sanitary sewer.
  - Collect the rinse water in a tank and haul off-site for proper disposal.
- Consider coating the copper materials with an impervious coating that prevents further corrosion and runoff. This will also maintain the desired color for a longer time, requiring less maintenance.

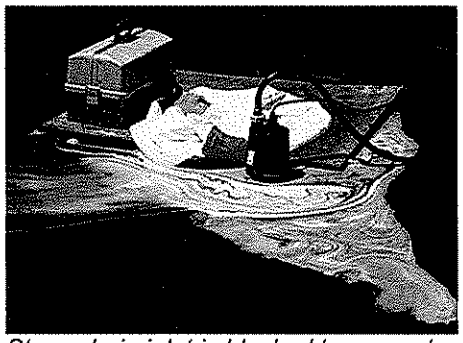

Storm drain inlet is blocked to prevent prohibited discharge. The water must be pumped and disposed of properly.

During Maintenance

Implement the following BMPs during routine maintenance activities, such as power washing the roof, re-patination or re-application of impervious coating:

- Block storm drain inlets as needed to prevent runoff from entering storm drains.
- Discharge the wash water to landscaping or to the sanitary sewer (with permission from the local sanitary sewer agency). If this is not an option, haul the wash water off-site for proper disposal.

Protect the Bay and yourself!

If you are responsible for a discharge to the storm drain of non-stormwater generated by installing, cleaning, treating or washing copper architectural features, you are in violation of the municipal stormwater ordinance and may be subject to a fine.

Contact Information

Santa Clara Valley Urban Runoff Pollution Prevention Program, www.scvurppp.org, **1-800-794-2482**

EPA
Renovation, Repair and Painting Rule

Does the RRP Rule apply to you?

The rule applies to all jobs in pre-1978 housing (i.e. "Target Housing") and child occupied facilities where more than 6 square feet per room or 20 square feet outside will be "disturbed" by worker(s) being compensated for the job. This includes landlords.

Where does the RRP Rule Apply?

The rule applies in Target Housing and Child-Occupied Facilities*

Target Housing - A house or apartment (including mobile homes) built before January 1, 1978 except for:

1) 0-bedroom units (like dorm rooms or studio apartments)
2) housing that is officially designated for the elderly or the handicapped
3) housing that has been tested by a State Certified Lead Inspector and found to be free of lead based paint.

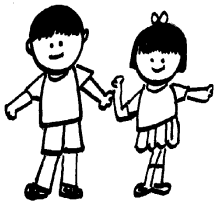

Child Occupied Facility - A building, or portion of a building, constructed prior to 1978, visited by the same child, 6 years of age or under, on at least 2 different days within any week, provided that each day's visit lasts at least 3 hours, the combined weekly visit lasts at least 6 hours, and the combined annual visits last at least 60 hours. Such facilities may include, but are not limited to, day-care centers, preschools and kindergarten classrooms.

What does the RRP Rule Require? *California Law requires lead-safe work practices for all pre-1978 buildings.

1. **Pamphlet Distribution**—Contractors must give clients a pamphlet called "Renovate Right" and get a signed receipt before beginning a job.
2. **Individual Certification**—At least one RRP Certified Renovator is required at each job site. Certification involves taking a 1-day class from an EPA Accredited Training Provider.
3. **Firm Certification**—In addition to individual certification, each firm, agency or non-profit must also become RRP certified.
4. **On-the-Job-Training**—RRP Certified Renovators are required to train all non-certified people at the job site. Note: Contractors who work on buildings receiving Federal assistance, including Section 8, must have everyone trained in the classroom, or have a state-certified lead in construction supervisor present.
5. **Paint Testing**—The rule requires contractors to either test paint they will disturb BEFORE beginning a job, or assume that it is lead-based. In California contractors may not test paint. Instead, current law requires that they must assume that all surfaces in all structures built before 1978 contain lead based paint. The only people who can test for lead-based paint in California are State Certified Lead Inspectors/Risk Assessors.
6. **Use Lead Safe Work Practices**—The RRP Rule requires that "Lead Safe Work Practices" be used when disturbing more than six (6) square feet per room inside or more than twenty (20) square feet of painted surfaces outside.
7. **Cleaning Verification**—At the end of each job, contractors are required to do a "cleaning verification" to make sure they cleaned up properly.

FOR ADDITIONAL INFORMATION, VISIT

The Environmental Protection Agency www.epa.gov/getleadsafe

Get the Lead Out Coalition www.getleadout.org

CITY OF MILPITAS
Building & Safety Department
455 E. Calaveras Blvd.
Milpitas, CA 95035
408-586-3240
www.ci.milpitas.ca.gov

WATER CONSERVING CERTIFICATE OF COMPLIANCE

Project Address: _____ Permit Number: _____

If the Building Inspector cannot physically inspect all plumbing fixtures in the building or cannot verify compliance due to lack of product markings or data, this Certificate of Compliance may be signed by the property owner(s) and given to the Building Inspector. The Building Inspector must inspect and verify all plumbing fixtures or receive this Certificate prior to final inspection.

This law applies only to properties built and available for use or occupancy on or before January 1, 1994.

As of January 1, 2014, the State of California per Civil Code Section 1101.4, applicants seeking to obtain permits for additions, alterations or improvements for any **one and two family** residential building *requires non-compliant plumbing fixtures to be replaced* throughout the building with water-conserving plumbing fixtures prior to final permit approval.

As of January 1, 2014 per Civil Code Section 1101.5, *all non-compliant plumbing fixtures* in any **multi-family** (more than two units) residential building and any **commercial** building *shall be replaced* with water-conserving plumbing fixtures in the following circumstances:

1. Additions, if the sum of concurrent building permits by the same permit applicant would increase the floor area of the building by more than 10%, all non-compliant fixtures must be upgraded throughout the building. This includes all common area plumbing fixtures as well as fixtures in private individual units or tenant unit owned by the same owner.

2. Alterations or improvements, if total construction cost in the building permit exceeds $150,000, all non-compliant fixutres that service the specific area of the alteration or improvement will be required to be upgraded.

3. Any alteration to a room that contains non-compliant plumbing fixtures will require all fixtures in that room to be upgraded.

On or before January 1, 2017, for any **one and two family** residential building and on or before January 1, 2019, for any **multi-family** (more than two units) residential building and any **commercial** building *all non-compliant plumbing fixtures shall be replaced* with water-conserving plumbing fixtures (regardless of whether property undergoes alterations or improvement).

Per Civil Code Sections 1101.2, 1101.6 & 1101.7 the requirementss of this law shall not apply to any of the following:

1. The requirements of this law shall be postponed one year from the date of issuance of a demolition permit for the building. If the building is not demolished after one year, the provision of this law shall apply even though the demolition permit is still in effect or a new demolition permit has been issued.

2. Registered historical sites.

3. Real property for which a licensed plumber certifiers in writing that, due to the age or configuration of the property or its plumbing, installation of water-conserving plumbing fixtures is not technically feasible.

4. A building for which water service is permanently disconnected.

5. My property was built and available for use or occupancy after January 1, 1994.

I/We, the owner(s) of this property, certifiy under penalty of perjury:

- ❑ All existing plumbing fixtures meet the minimum requirements of water-conserving as noted below.
- ❑ All non-compliant plumbing fixtures have been replaced with water-conserving plumbing fixtures in accordance with Civil Code Sections 1101.1 through 1101.8, the current California Plumbing Code and California Green Building Standards Code, and manufacturer's installation requirements, and that the water-conserving plumbing fixtures comply with the requirements as noted below.
- ❑ I/We are exempt for reason #____ listed above. If for reason #3, attached is a letter from a licensed plumber.

_____
Signature of Property Owner(s)

_____ Date: _____
Print Name(s)

The following non-compliant fixtures shall be replaced with water-conserving fixtures as noted: (CGBC 4.303 & 5.303)

- Existing water closets that exceed 1.6 gallons per flush shall be replaced with one that has an effective flush volume not to exceed 1.28 gallons per flush. Tank-type water closets shall be certified to the performance criteria of the U.S. EPA WaterSense Specification for Tank-type toilets. The effective flush volume of dual flush toilets is defined as the composite, average flush volume of two reduced flushes and one full flush.
- Existing urinals that exceed 1.0 gallons per flush shall be replace with one that uses not more than 0.5 gallons per flush.
- Existing single shower heads that exceed 2.5 gallons per minute shall be replaced with one that has a maximum flow rate of not more than 2.0 gallons per minute at 80 psi. Shower heads shall be certified to the performance criteria of the U.S. EPA WaterSense Specification for Showerheads.
- When a shower is served by more than one showerhead, the combined flow rate of all showerheads and/or other shower outlets controlled by a single valve shall not exceed 2.0 gallons per minute at 80 psi, or the shower shall be designed to allow only one shower outlet to be in operation at a time. A hand-held shower shall be considered a showerhead.
- Existing residential lavatory faucets that exceed 2.2 gallons per minute shall be replaced with one that has a maximum flow rate not to exceed 1.5 gallons per minute at 60 psi. The minimum flow rate shall not be less than 0.8 gallons per minute at 20 psi.
- Existing lavatory faucets in common and public use areas of multifamily residential & in commercial areas that exceed 2.2 gallons per minute shall be replaced with one that has a maximum flow rate not to exceed 0.5 gallons per minute at 60 psi.
    - Metering faucets shall have a maximum flow rate of 0.20 gallons per cycle commercial or 0.25 residential.
- Existing kitchen faucets that exceed 2.2 gallons per minute shall be replaced with one that has a maximum flow rate not to exceed 1.8 gallons per minute at 60 psi. Residential kitchen faucets may temporarily increase the flow above the maximum rate, but not to exceed 2.2 gallons per minute at 60 psi, and must default to a maximum flow rate of 1.8 gallons per minute at 60 psi.
    - Note: Where complying faucets are unavailable, aerators or other means may be used to achieve reduction.

CERTIFICATE OF COMPLIANCE	CF1R-ALT-01-E
Prescriptive Residential Alterations	(Page 1 of 4)
Project Name:	Date Prepared:

A. GENERAL INFORMATION

01	**Project Name:**		**02**	**Date Prepared:**	
03	**Project Location:**		**04**	**Building Front Orientation (deg or cardinal):**	
05	**CA City:**		**06**	**Number of Altered Dwelling Units:**	
07	**Zip Code:**		**08**	**Fuel Type:**	
09	**Climate Zone:**		**10**	**Total Conditioned Floor Area (ft2):**	
11	**Building Type**		**12**	**Slab Area (ft2)**	
13	**Project Scope:**			**:**	

B. BUILDING INSULATION DETAILS (Section 150.2(b)1)

01	02	03	04	05	06		07	08	09	10	11
					Proposed					**Required**	
								Appendix JA4 Reference			
Tag/ID	Assembly Type	Frame Type	Frame Depth (inches)	Frame Spacing (inches)	Cavity R-value	Continuous Insulation R-value	U-factor	Table	Cell	U-Factor	Comments

C. ROOF REPLACEMENT (Prescriptive Alteration, Section 150.2(b)1H)

01	02	03	04	05	06	07	08	09	10	11	12	13
						Proposed				**Minimum Required**		
Method of Compliance	Roof Pitch	Exception	CRRC Product ID Number	Product Type	R-value Deck Insulation	Initial Solar Reflectance	Aged Solar Reflectance	Thermal Emittance	SRI (Optional)	Aged Solar Reflectance	Thermal Emittance	SRI (Optional)

NOTES

- Roof area covered by building integrated photovoltaic panels and solar thermal panels are exempt from the above Cool Roof requirements.
- Liquid field applied coatings must comply with installation criteria from section 110.8(i)4.

D. FENESTRATION/GLAZING AREAS ALLOWED (Section 150.2(b)1)

01	02	03	04
Alteration Type	Orientation	Maximum Allowed ft2	Comments

E. FENESTRATION/GLAZING PROPOSED AREAS AND EFFICIENCIES (Section 150.2(b)1)

01	02	03	04	05	06	07	08	09	10	11	12	13	14	15
Tag/ ID	Fenestration Type	Frame Type	Dynamic Glazing	Orientation N, S, W, E, or Roof	Area Removed ft2	Area Added ft2	Net Added Area ft2	Maximum Allowed U-factor	U-factor	Source	SHGC	Source	Exterior Shading Device	Combined SHGC from CF1R-ENV-03

a	Net Added West-facing Fenestration Area	
b	Existing + Added West-facing Fenestration Area	
c	Maximum Allowed West-facing Fenestration Area	
d	Is West-facing Fenestration Area ≤ Maximum Allowed West-facing Fenestration Area	
e	Net Added Fenestration Area (all orientations)	
f	Existing + Added Fenestration Area (all orientations)	
g	Maximum Allowed Fenestration Area (all orientations)	
h	Is Existing + Added Fenestration Area ≤ Maximum Allowed Fenestration Area (all orientations)	

F. SPACE CONDITIONING(SC) SYSTEMS – HEATING/COOLING (Prescriptive section 150.2(b))

01	02	03
Dwelling Unit Name	Dwelling Unit CFA (Ft2)	Comments

G. WATER HEATING SYSTEMS (Section 150.2(b)1G)

01	02	03	04	05	06	07	08	09	10	11	12	13	14	15
Water Heating System Identification or Name	Water Heating System Type	Water Heater Type	# of Water Heaters in system	Water Heater Storage Volume (gal)	Fuel Type	Rated Input Type	Rated Input Value	Heating Efficiency Type	Heating Efficiency Value	Standby Loss (%)	Exterior Insul. R-Value	Back-Up Solar Savings Fraction	Central DHW System Distribution Type	Dwelling Unit DHW System Distribution Type

H. SPACE CONDITIONING SYSTEMS AND WATER HEATING SYSTEMS IN MULTIFAMILY DWELLING UNITS

01	02	03	04	05	06
Dwelling Unit Name	Dwelling Unit Total CFA (ft2)	Central Water Heating System Identification or Name	Dwelling Unit Water Heating System Identification or Name	Dwelling Unit: Alteration to the Space Conditioning System(s)?	Comments

CERTIFICATE OF COMPLIANCE	CF1R-ALT-01-E
Prescriptive Residential Alterations	(Page 4 of 4)
Project Name:	Date Prepared:

DOCUMENTATION AUTHOR'S DECLARATION STATEMENT	
1. I certify that this Certificate of Compliance documentation is accurate and complete.	
Documentation Author Name:	Documentation Author Signature:
Company:	Signature Date:
Address:	CEA/ HERS Certification Identification (if applicable):
City/State/Zip:	Phone:

RESPONSIBLE PERSON'S DECLARATION STATEMENT

I certify the following under penalty of perjury, under the laws of the State of California:

1. The information provided on this Certificate of Compliance is true and correct.
2. I am eligible under Division 3 of the Business and Professions Code to accept responsibility for the building design or system design identified on this Certificate of Compliance (responsible designer).
3. That the energy features and performance specifications, materials, components, and manufactured devices for the building design or system design identified on this Certificate of Compliance conform to the requirements of Title 24, Part 1 and Part 6 of the California Code of Regulations.
4. The building design features or system design features identified on this Certificate of Compliance are consistent with the information provided on other applicable compliance documents, worksheets, calculations, plans and specifications submitted to the enforcement agency for approval with this building permit application.
5. I will ensure that a registered copy of this Certificate of Compliance shall be made available with the building permit(s) issued for the building, and made available to the enforcement agency for all applicable inspections. I understand that a registered copy of this Certificate of Compliance is required to be included with the documentation the builder provides to the building owner at occupancy.

Responsible Designer Name:	Responsible Designer Signature:
Company :	Date Signed:
Address:	License:
City/State/Zip:	Phone:

For assistance or questions regarding the Energy Standards, contact the Energy Hotline at: 1-800-772-3300.

Registration Number: Registration Date/Time: HERS Provider:

Minimum requirements for prescriptive alteration compliance can be found in Building Energy Efficiency Standards Section 150.2(b)1.

Completing these forms will require that you have the Reference Appendices for the 2013 Building Energy Efficiency Standards (P400-2012-005). This document contains the Joint Appendices which are used to determine climate zone and to complete the section for opaque surfaces. When the term CF1R is used it means the CF1R-ALT-01. Worksheets are identified by their entire name and subsequently by only the worksheet number, such as WS-02.

Instructions for sections with column numbers and row numbers are given separately.

If any part of the alteration does not comply, prescriptive compliance fails, in which casethe performance compliance approach must be used in an attempt to achieve compliance.

A. GENERAL INFORMATION

Project Name: Identifying information, such as owner's name.

Date: Date of document preparation.

Project Location: Legal street address of property or other applicable identifying information.

Compliance Method: Prescriptive.

CA City: Legal city/town of property.

Building Front Orientation: Building front expressed in degrees, where North = 0, East = 90, South = 180, and West = 270. Indicate cardinal if it is a subdivision or multi-family project built in multiple orientations. The standards (section 100.1) include the following additional details for determining orientation:

- Cardinal covers all orientations (for buildings that will be built in multiple orientations);
- North is oriented to within 45 degrees of true north, including 45 degrees east of north;
- East is oriented to within 45 degrees of true east, including 45 degrees south of east;

- South is oriented to within 45 degrees of true south, including 45 degrees west of south;
- West is oriented to within 45 degrees of true west, including 45 degrees south of west.

Zip Code: 5-digit zip code for the project location (used to determine climate zone).

Number of Dwelling Units: 1 for single-family, 1 or more for multifamily.

Climate zone: From Joint Appendix JA2.1.1.

Fuel Type: Natural Gas, Liquefied Propane Gas, or Electricity. NOTE: prescriptive compliance only allows electricity if existing appliances are electric and natural gas is not available in the building.

Building Type: Single Family (includes duplex), or Multi Family (a building that shares common walls and common floors or ceilings).

Total Conditioned Floor Area: Enter the new conditioned floor area in ft^2, as measured from the outside of exterior walls of the dwelling unit or building being altered.

Project Scope: Check all that apply – insulation, roof replacement, fenestration/glazing, heating system, cooling system, duct system, and/or water heating alteration.

Slab Area: Area of the first floor slab (if any) in ft^2.

B. BUILDING INSULATION DETAILS (Section 150.2(b)1)

1. Tag/ID: A label (if any) from the plans, such as A1.4 or wall.
2. Assembly Type: Roof, Ceiling, Wall, Floor over crawlspace or floor over exterior.
3. Frame Type: Wood or Metal.
4. Frame Depth: Nominal dimensions of framing material such as 4 (if 2x4) or 6 (if 2x6).
5. Frame Spacing: 16 or 24 inches on center.
6. Cavity R-value. Insulation installed between framing.

NOTE: Section 110.8(d) specifies that if adding insulation to an existing attic, the resulting attic insulation must total R-30. However, the amount of insulation required is limited to the amount of room available for insulation without conflicting with Building Code Section 1203.2.

7. U-factor: The U-factor for the entire wall, roof or floor assembly.
8. Appendix JA4 Table: Table number used to determine the R-value or U-factor (e.g., an attic assembly is 4.2.1).
9. Appendix JA4 Cell: Cell number used to determine the R-value or U-factor (e.g., an R-38ceiling with 24-inch on center framing is A21).
10. Required U-factor: from mandatory requirements in Sections 110.0 and 150.0.
11. Comments or notes regarding location or unique condition.

C. ROOF REPLACEMENT (Prescriptive Alteration, Section 150.2(b)1H)

When 50% or more of the roof is being replaced the roofing requirements are triggered. Any areas of roof covered by building integrated photovoltaic panels and solar thermal panels (the area of roof not covered by photovoltaic panels would still need to meet any applicable cool roof requirements). Additionally, there are many alternatives/exceptions when a cool roof is required.

When the roof is steep slope (pitch greater than 2:12) the roof requirements include a cool roof in climate zones 10-15. The minimum requirement is 0.20 aged solar reflectance, 0.75 thermal emittance, or a minimum SRI of 16.

1. Method of Compliance: indicate if the method of compliance is going to be based on Aged Solar Reflectance and Thermal Emittance, the Solar Reflectance Index (SRI), or an Exception.
2. Roof Pitch: Expressed as 4:12, for example, which means the roof rises 4 foot within a span of 12 feet. When roofs have multiple pitches the requirements are based on the pitch of 50% or more of the roof.
3. Exception: If meeting one of the exceptions. Indicate which exception is, or will be, met.

NOTES: EXCEPTIONS AND ALTERNATIVES FOR STEEP SLOPE ROOFS:

(a) Mass roof 25 lbs/ft^2 or greater (uncommon situation such as sod roof);
(b) Air space 1” from top of roof deck to bottom of roofing;
(c) Roofing product has a profile ratio of rise to width of 1 to 5 for 50 percent or greater of the width of the roofing product;
(d) Ducts already meet Section 150.1(c) insulation and duct leakage requirements;
(e) Roof has R-38 insulation;
(f) Roof has a radiant barrier;
(g) No ducts are installed in the attic; or
(h) R-4 insulation above the roof deck.

In climate zones 13-15, when there is a low slope roof (pitch 2:12 or less) the cool roof requirements are for a minimum aged solar reflectance of 0.63, a minimum 0.75 thermal emittance, or a minimum SRI of 75.

EXCEPTIONS AND ALTERNATIVES FOR LOW SLOPE ROOFS:

(a) Mass roof 25 lbs/ft^2 or greater (uncommon situation such as sod roof);
(b) No ducts are installed in the attic; or
(c) Roof deck installation—by installing roof deck insulation, a lower aged solar reflectance is required: R-2 (0.62-0.60), R-4 (0.59-0.55), R-6 (0.54-0.50), R-8 (0.49-0.45), R-12 (0.44-0.40), R-16 (0.39-0.35), R-20 (0.34-0.30), R-24 (0.29-0.25).

NOTE: If one of the exceptions above has been selected than the rest of Section c is Not Required.

4. The CRRC Product ID Number is obtained from the Cool Roof Rating Council's Rated Product Directory at www.coolroofs.org/products/results . Products are listed by manufacturer, brand, type of installation, roofing material, and color, as well as product performance.
5. Product type: See Cool Roof Rating Council's directory. Generally product types include single-ply roof, wood shingles, asphalt roof, metal roof, tile roof.
6. R-value Deck Insulation: If one of the exceptions selected includes adding roof deck insulation, indicate the R-value of insulation.
7. Proposed Initial Solar reflectance: base on the product chosen from the Cool Roof Rating Council's Rated Product Directory. If using default assumption indicate NA since the Aged solar reflectance is available.
8. Proposed Aged Solar Reflectance: Value is from the Cool Roof Rating Council's Rated Product Directory. If the aged value is not available, calculate the calculated Aged Solar reflectance using the Solar Reflectance Index (SRI) Calculation worksheet located on the California Energy Commission website or the aging equation $\rho_{aged}=[0.2+\beta[\rho_{initial}-0.2]$, where $\rho_{initial}$ = the initial solar reflectance and soiling resistance β is listed by product type below.

VALUES OF SOILING RESISTANCE β BY PRODUCT TYPE

Product Type	CRRC Product Category	β
Field-Applied Coating	Field-Applied Coating	0.65
Other	Not A Field-Applied Coating	0.70

9. Proposed Thermal Emittance: From the product specification default value. If using a calculated SRI place the thermal emittance used to calculate SRI.

10. Proposed SRI: It is optional to meet either the SRI but if chosen to do so, use the Solar Reflectance Index (SRI) Calculation Worksheet found on the California Energy Commission website http://www.energy.ca.gov/title24/ .
11. Minimum Required Aged Solar Reflectance: Based on climate zone and roof slope.
12. Minimum Required Thermal Emittance: Based on climate zone and roof slope.
13. Minimum SRI: Based on climate zone and roof slope.

NOTE: If the cool roofing requirements will be met by a liquid field applied coating, Section 110.8(i)4 requires the coating be applied across the entire roof surface and meet the dry mil thickness or coverage recommended by the manufacturer.

D. FENESTRATION/GLAZING AREAS ALLOWED

The climate zone and size of the addition will affect the amount of fenestration (also known as glazing) allowed. If limited to 20%, this is calculated as Conditioned Floor Area x 0.20 = total ft^2 of fenestration allowed (20%). Fenestration areas are expressed in feet, not inches. When west-facing fenestration is limited (in climate zones 2, 4, and 6-16), it is limited to a maximum of 5%. Additions of 1,000 ft^2 or less have alternate requirements. For example, the limit may be 120 ft^2 of fenestration or 25%. While west-facing fenestration may be limited, if there is no west fenestration the upper limit remains at 120 ft^2 or 25% (or the values shown in columns 2 and 3).

The Alteration Type and Fenestration Type will affect how the standards apply and whether the fenestration area is limited. Percentages are determined as Conditioned Floor Area x 0.20 = total ft^2 of fenestration allowed (20%). Depending on the climate zone, If west-facing fenestration is limited, it is limited to a maximum of 5%. The overall total fenestration area is limited to 20%, not 25%. Fenestration areas are expressed in feet, not inches.

1. Alteration Type. Enter **Repair**, **Replace75, ReplaceALL**, **Add75**, **Add76, ReplaceSky, Add16Sky, or AddSky** as describe below:

   Repair: A repair is when glass in an existing sash and frame is replaced or replacement of sashes in an existing frame. Repairs are not required to meet any requirements of the energy efficiency standards.

   Replace75: When up to 75 ft^2 of fenestration is replaced, the replacement vertical fenestration must meet a maximum 0.40 U-factor and in climate zones 2, 4, 6-16 a maximum 0.35 SHGC.

   ReplaceAll: When all fenestration (with an area of greater than 75 ft^2) is replaced, the new fenestration product must have a maximum U-factor of 0.32 and in climate zones 2, 4, 6-16 a maximum SHGC of 0.25. This alteration does not trigger the area limits of Package A.

Add75: When adding fenestration up to 75 ft^2, the selected fenestration product must have a maximum U-factor of 0.32 and in climate zones 2, 4, 6-16 a maximum SHGC of 0.25. This alteration does not trigger the area limits of Package A.

Add76: When more than 75 ft^2 is added to the existing fenestration, in addition to the above requirements, the maximum fenestration area of the dwelling unit cannot exceed 20% and the maximum West-facing fenestration area (in climate zones 2, 4, 6-16) cannot exceed 5%.

ReplaceSky: When an equal area of existing skylights is replaced, the replacement skylights must meet a maximum 0.55 U-factor and in climate zones 2, 4, 6-16 a maximum 0.30 SHGC.

Add16Sky: When up to 16 ft^2 of skylight area is added, the product selected must meet a maximum U-factor of 0.55 and in climate zones 2, 4, 6-16 a maximum 0.30 SHGC.

AddSky: When greater than 16 ft^2 of skylight area is added, the product selected must meet a maximum U-factor and SHGC of Table 150.1-A, which is a maximum 0.32 U-factor and in climate zones 2, 4, 6-16 a maximum 0.25 SHGC.

The remaining fields are auto completed based on alteration type, conditioned floor area, and climate zone.

2. Orientation: In climate zones with a west-facing limit (2, 4, 6-16), two values will be displayed, one for west and one for the other orientations (E, S, and W).
3. Maximum Allowed ft^2: If West-facing fenestration is limited two rows will appear. West-facing fenestration area is limited to 5%, and the maximum total fenestration area is 20%. Depending on the type of fenestration and the alteration type, this field may show values such as 75 ft^2 or 16 ft^2.

   The values in these fields will be entered into the lower Section E, rows c and g.

   NOTE: West includes any vertical fenestration oriented to within 45 degrees of true west, including 45 degrees south of west. For skylights, west also includes any skylight area facing any direction with a pitch of less than 1:12

4. Comments: Note any special location or comment here.

E. FENESTRATION/GLAZING PROPOSED AREAS AND EFFICIENCIES

1. Tag/ID: A label (if any) from the plans, such as W1.

2. Fenestration Type: Window, glass door, skylight, glass block.
3. Frame type: Vinyl, wood, metal, metal thermal break, clad, fiberglass, or none.
4. Dynamic Glazing: Indicated if the fenestration has integrated shading devise, chromogenic glazing or none for no dynamic Glazing. Chromogenic glazing shall be considered separately from other fenestration types.
5. Orientation (North, East, South, West). In climate zones where the West-facing glazing is limited, list west-facing individually. The definitions in the Energy Efficiency Standards include these specific details:
   - North is oriented to within 45 degrees of true north, including 45 degrees east of north;
   - East is oriented to within 45 degrees of true east, including 45 degrees south of east;
   - South is oriented to within 45 degrees of true south, including 45 degrees west of south;
   - West is oriented to within 45 degrees of true west, including 45 degrees north of west.

   Skylights in a roof pitch greater than 1:12 can be included as facing the same orientation as that portion of the roof angle. If the skylight is in a roof with a pitch less than 1:12, the skylight is assumed to face west.

6. Area Removed ft^2: The size of window(s) being replaced or removed (combine windows with the same characteristics).

   NOTE: Doors with glazing are counted in one of two ways. A door with 50% or more glazing is counted as the entire door area. A door with less than 50% glazing can be counted as the entire door area or can be calculated as the actual glass area with a 2-inch (0.17 ft^2) frame all around.

7. Area Added ft^2: The size of new or replacement window(s), doors, skylights.
8. Net Added Area ft^2: The difference between columns 4 and 5 (can be a negative number if reducing the area).
9. Maximum Allowed U-factor: This field will be vary depending on the type of alteration specified in Section D.

   NOTE: For up to 3 ft^2 of tubular skylights and up to 3 ft^2 of glazing in a door, this field and column 8 can be n/a. For up to 16 ft^2 of skylight, enter 0.55.

10. U-factor: Enter (a) the NFRC U-factor based on the proposed brand and type of fenestration using National Fenestration Rating Council (www.nfrc.org) certified values, (b) the default value from Table 110.6-A, or (c) the weighted average U-factor calculated on form CF1R-ENV-02-E, Area Weighted Average Calculation Worksheet. For the exceptions, up to 3 ft^2 of tubular skylights and up to 3 ft^2 of glazing in a door enter N/A, and for up to 16 ft^2 of skylight, enter 0.55. If any products (other than the exceptions) have a higher U-factor than 0.32, first complete a ENV-02 to calculate a weighted average U-factor and attach it to the CF1R.

NOTE: Dynamic glazing is a glazing system that changes its performance U-factor and SHGC based on the physical environment. Dynamic glazing includes chromogenic glazing or integrated shading systems (this does not include internally or externally mounted shading devices). If using dynamic glazing, use the lowest tested U-factor and SHGC in Columns 8 and 11.

11. Source: NFRC, Default or WS-02. The source of the U-factor data for the fenestration product.
12. Maximum Allowed SHGC: This field will vary depending on the type of alteration specified in Section D for climate zones 2, 4 and 6-16. In climate zones 1, 3 and 5, where there is no maximum SHGC requirement, this value is n/a.
13. Source: NFRC, Default (from Table 110.6-B) or ENV-02. The source of the SHGC data for the fenestration product.
14. Exterior Shading Device: If exterior shading devices are used to meet the SHGC requirement, indicate the type of device (from Table S-1 of CF1R-ENV-03 Solar Heat Gain Coefficient Worksheet) and attach an ENV-03.

    NOTES:

    (1) An exterior shading device is not used for products with an NFRC rated U-factor and SHGC based on a factory integrated shading device.

    (2) If using an overhang for south-facing glazing, the glazing must be fully shaded at solar noon on August 21 and substantially exposed to direct sunlight at solar noon on December 21 (see Residential Manual, Section 3.5.5).

15. Combined SHGC From CF-1R-ENV-03: If exterior shading devices are combined with the SHGC value of the fenestration to meet the prescriptive SHGC requirements (as indicated by a value in column I. 11), indicate the SHGC calculated on form CF-1R-ENV-03 and attach the form for each window with an exterior shading device.

To determine compliance with allowable fenestration areas, complete rows a-h.

a. Net Added West-facing Fenestration Area: If limited, enter the total amount of west-facing fenestration ONLY that will be added to the dwelling unit when alterations are complete.
b. Existing + Added West-facing Fenestration Area: If more than 75 ft of fenestration is added, the dwelling unit cannot exceed 5% west-facing fenestration in climate zones 2, 4, and 6-16. Enter the area of West-facing fenestration ONLY that will be in the dwelling unit when alterations are complete.
c. Maximum Allowed West-facing Fenestration Area: Conditioned Floor Area x 0.05 (for climate zones affected).
d. Is West-facing Fenestration Area $\leq$ Maximum Allowed West-facing Fenestration Area: Indicate Yes if west-facing fenestration area is less than or equal to the maximum area allowed, West-facing fenestration area is in compliance.
e. Net Added Fenestration Area (all orientations): This field is to show the net area of added fenestration for all orientations. When limited, the maximum is either up to 75 ft^2 of added fenestration or a 20% limit is placed on the dwelling unit when alterations are complete. The total includes all existing and new fenestration, including the area of fenestration with exceptions for U-factor and SHGC.

f. Existing + Added Fenestration Area (all orientations): If more than 75 ft^2 of fenestration is added, the dwelling unit cannot exceed 20% fenestration. Enter the area of all fenestration existing and new in the dwelling unit when alterations are complete (including West facing).
g. Maximum Allowed Total Fenestration Area (all orientations). Conditioned Floor Area x 0.20.
h. Is Existing + Added Fenestration Area $\leq$ Maximum Allowed Total Fenestration Area: Indicate Yes if the total fenestration area is less than or equal to the maximum area allowed, the fenestration area is in compliance.

NOTE: If any fenestration has a U-factor greater than the maximum, with the exception of the 3 allowances for tubular skylights, glass in door, and skylights with 0.55 or less, complete a ENV-02 and attach it to the CF1R. If adding fenestration in climate zones with a maximum SHGC requirement, and any fenestration has an SHGC greater than required (with the exception of the 3 allowances for tubular skylights, glass in door, and skylights with 0.55 or less), complete a ENV-02 and attach it to the CF1R.

F. HVAC SYSTEMS – HEATING/COOLING

Requirements of the standards apply to a heating and cooling system alteration based on the type of alteration and the system type (Section 150.2(b)1). A completely new system will meet all mandatory and prescriptive requirements, which vary by climate zone (based on Section 150.2(b)1C). [NOTE: Computer performance compliance can be used to trade-off any requirements that are not mandatory.] When parts of a system are replaced, it may trigger some of the same requirements that apply to new systems and duct alterations. A Certificate of Compliance for Alterations to Space Conditioning Systems (CF1R-ALT-02) is required for each dwelling unit with a space conditioning system alteration.

1. Dwelling Unit Name: Name of dwelling unit or any other identifying name.

2. Dwelling Unit CFA (ft2): Conditioned floor area in ft2, as measured from the outside of exterior walls of the dwelling unit or building being altered.

3. Comments: Any notes regarding location or unique conditions.

G. WATER HEATING SYSTEMS

Water heating compliance for an alteration is described in Section 150.2(b). For single dwelling a gas or propane water heater, with a storage tank of 60 gallons maximum or instantaneous (tankless) can be used. Dwelling Unit distribution systems are limited to Standard trunk and branch or

demand recirculation for gas or propane water heater. Demand recirculation is not allowed for electric water heater. If there is no natural gas connected to the building, an electric water heater may be replaced with another electric water heater. However, changing from gas to electric is not allowed.. Multi-family central systems must use certified equipment as defined under Section 110.1 and 110.3.

NOTE: If the proposed installation does not meet the requirements allowed specifically for alterations, use form CF1R-NCB-01 to document the water heater alteration.

1. Water Heating System Identification or Name: enter a unique name for the Water Heating System.
2. Water heating system type: Domestic Hot Water (DHW), Hydronic, Combined Hydronic, or Central. DHW is for domestic hot water, hydronic is a water heating system used for space heating only; combined hydronic are when the water heater will provide both space conditioning and domestic hot water.
3. Water heater type. For non-central systems only Small Storage or Small Instantaneous are allowed. For central systems pick from Large Storage, Small Storage, Heat Pump, Boiler, Large Instantaneous, Small Instantaneous or Indirect.
4. Number of water heaters in system: In single-family and multi-family with water heaters in each dwelling units the value is 1. For multi-family central systems serving multiple dwelling units enter the total number of water heaters.
5. Water heater volume (gal): tank capacity in gallons. For individual water heaters for a dwelling unit this will be 60 gallons or less. If instantaneous, enter n/a. For multi-family central systems enter the total storage volume.
6. Fuel Type: Gas, Propane, Electric (Only if natural gas is not available)
7. Rated Input Type: Enter the equipment input rating type, for gas or propane fired units are Btuh, for electric fired system the units are kW.
8. Rated Input Value: Enter the numeric value of rated input.
9. Heating Efficiency Type: Energy Factor, AFUE, or Thermal Efficiency. From product literature or a California Energy Commission directory.
10. Heating Efficiency Value: Enter the value from product literature or a California Energy Commission directory
11. Standby Loss (percent): Applies only to large storage water heaters, Enter n/a for small storage or instantaneous water heaters.
12. Exterior Insulation R-Value: Enter the R-value if exterior insulation on the storage tank is installed
13. Back-up solar savings fraction: If compliance requires a back-up solar system, indicate the solar contribution (e.g., 0.30). External calculations are required.
14. Central DHW Distribution System: For multi-family buildings with using a central distribution system a demand recirculation system with at least two distribution loops must be installed. This requirement applies to any building with eight or more units. If the system is non-central or project is individual units enter n/a.
15. Dwelling Unit DHW Distribution Type: For a Central DHW this field shall be Standard. If non-central then pick from Standard, Demand Recirculation – Manual Control, Demand Recirculation – Sensor Control. If non-central electric water heater this must be Standard, no recirculation system shall be installed.

H. SPACE CONDITIONING SYSTEMS AND WATER HEATING SYSTEMS IN MULTIFAMILY DWELLING UNITS

Requirements of the standards apply to a heating and cooling system alteration based on the type of alteration and the system type (Section 150.2(b)1). A completely new system will meet all mandatory and prescriptive requirements, which vary by climate zone (based on Section 150.2(b)1C). [NOTE: Computer performance compliance can be used to trade-off any requirements that are not mandatory.] When parts of a system are replaced, it may trigger some of the same requirements that apply to new systems and duct alterations. A Certificate of Compliance for Alterations to Space Conditioning Systems (CF1R-ALT-02) is required for each dwelling unit with a space conditioning system alteration.

1. Dwelling Unit Name: Name of dwelling unit or any other identifying name.
2. Dwelling Unit Total CFA (ft2): Conditioned floor area in ft2, as measured from the outside of exterior walls of the dwelling unit or building being altered.
3. Central Water Heating System Identification or Name: select one of the central DHW system names.
4. Dwelling Unit Water Heating System Identification or Name: Select the applicable water heating system name(s) that were entered in section G or select n/a if no water heating systems are planned to be installed in this dwelling. If more than one water heating system type is needed in the dwelling unit, enter another row of data for the dwelling unit and select the additional water heating system name.
5. Alteration to the Space Conditioning System(s)? If altering one or more of the Space conditioning systems in the dwelling enter yes, otherwise enter no
6. Comments: Any notes regarding location or unique conditions.

SIGNATURES

1. The person who prepared the CF1R will sign and complete the fields for their name, company (if applicable), address, phone number, certification information (if applicable), date and signature (may be electronic).
2. The person who is assuming responsibility for the project being built to comply with Title 24, Part 6, will complete the fields for their name, company (if applicable), address, phone number, license number (if applicable), date and signature (may be electronic).

REGISTRATION

1. The CF1R must be registered with a HERS provider prior to submitting for a building permit. See Residential Manual Section 2.1.1.

INSULATION INSTALLATION

CERTIFICATE OF INSTALLATION		CF2R-ENV-03-E
Insulation Installation		(Page 1 of 4)
Project Name:	Enforcement Agency:	Permit Number:
Dwelling Address:	City	Zip Code

If more than one person has responsibility for installation of the items on this certificate, each person shall prepare and sign a certificate applicable to the portion of construction for which they are responsible. Alternatively, the person with chief responsibility for construction shall prepare and sign this certificate for the entire construction. The signer agrees that all applicable Mandatory Measures were met.

Medium and light density SPF manufacturers claim various R-values per inch. In California the maximum R-value that can be claimed for ccSPF is an R-value of 5.8 per inch and for ocSPF is an R-value of 3.6 per inch unless documentation is provided showing that the product and/or manufacturer has a current ICC Evaluation Service Report (ESR) that shows compliance with Acceptance Criteria for Spray-Applied Foam Plastic Insulation--AC377.

***NOTE**: The Energy Efficiency Standards Section 110.7 requires that "all joints, penetrations and other openings in the building envelope that are potential sources of air leakage shall be caulked, gasketed, weather stripped, or otherwise sealed to limit infiltration and exfiltration." In areas where spray foam (SPF) insulation is used, the SPF can be considered the air barrier. Other than rigid board insulation, all other forms of insulation are not considered as an air barrier.*

A. ROOF/CEILING INSULATION

01	02	03	04	05	06	07	08	09	10
I.D	**Manufacturer & Brand**	**Framing Material**	**Framing Size**	**Frame Spacing (inches)**	**Insulation Type**	**Cavity Insulation R-value**	**Insulation Depth (inches)**	**Above Deck R-value**	**Below Deck R-value**

B. WALL INSULATION

01	02	03	04	05	06	07	08	09	10
I.D	**Manufacturer & Brand**	**Framing Material**	**Framing Size**	**Frame Spacing (inches)**	**Insulation Type**	**Cavity Insulation R-value**	**Insulation Depth (inches)**	**Exterior Wall R-value**	**Interior Wall R-value**

C. MASS INSULATION

01	02	03	04	05	06	07	08
I.D	**Manufacturer & Brand**	**Location**	**Mass Thickness (inches)**	**Furring Strip Type/ Depth (inches)**	**Insulation Type**	**Exterior Insulation R-value**	**Interior Insulation R-value**

D. RAISED FLOOR INSULATION

01	02	03	04	05	06	07	08	09	10
I.D	**Manufacturer & Brand**	**Framing Material**	**Framing Size**	**Frame Spacing (inches)**	**Insulation Type**	**Cavity Insulation R-value**	**Insulation Depth (inches)**	**Exterior Floor R-value**	**Interior Floor R-value**

E. SLAB FLOOR/PERIMETER INSULATION (SEE F. FOR INSULATION REQUIREMENTS FOR HEATED SLABS)

01	02	03	04	05	06	07	08
I.D.	**Manufacturer & Brand**	**Floor Type**	**Insulation Type**	**Insulation Depth (inches)**	**Insulation R-Value**	**Vertical Insulation Length (inches)**	**Horizontal Insulation Length (feet)**

CERTIFICATE OF INSTALLATION		CF2R-ENV-03-E
Insulation Installation		(Page 2 of 4)
Project Name:	Enforcement Agency:	Permit Number:
Dwelling Address:	City	Zip Code

F. HEATED SLAB INSULATION	
01	All heated slabs shall be insulated as required by Section 110.8(g). Footings must meet required insulation levels.
02	Insulation shall be installed from the top of the slab, down 16 inches or to the frost line, whichever is greater. Climate zones 1-15 requires R-5, climate zone 16 requires R-10.
03	Alternatively, vertical insulation from top of slab at inside edge of outside wall down to the top of the horizontal insulation. Horizontal insulation from the outside edge of the vertical insulation extending 4 feet toward the center of the slab in a direction normal to the outside of the building in plan view. Climate zones 1-15 require R-5, climate zone 16 requires R-10 vertical and R-7 horizontal.
The responsible person's signature on this compliance document affirms that all applicable requirements in this table have been met.	

G. MINIMUM MANDATORY MEASURES	
01	**Insulation** - 110.8(a): All installed insulation is certified and listed with the Department of Consumer Affairs, "Standards for Insulating Material."
02	**Insulation** - 110.8(b): Urea formaldehyde foam insulation is protected by 4 mil polyethylene vapor retarder.
03	**Insulation** - 110.8(c): Flame spread and smoke density requirements of CBC are met.
04	**Raised Floor** - 150.0(d): All raised wood-frame floor have a minimum R-19 insulation or equivalent U-factor
05	**Slab Floor/Perimeter** - 150.0(l): Water absorption rate for the insulation material alone without facings is no greater than 0.3%; water vapor permeance rate is no greater than 2.0 perm/inch, and perimeter insulation is protected from physical damage and UV light deterioration.
06	**Above Grade Exterior Wall** - 150.0(c)1: All 2x4 wood-frame walls have a minimum R-13 insulation or equivalent U-factor.
07	**Above Grade Exterior Wall** - 150.0(c)2: All 2x6 wood-frame walls have a minimum R-19 insulation or equivalent U-factor.
08	**Ceiling/Rafter Roof** - 150.0(a)1: All wood-framed ceilings have a minimum R-30 insulation or equivalent U-factor.
09	**Vapor Retarder** – 150.0(g)1: n Climate Zones 14 and 16, Class II vapor retarder installed on conditioned space side of insulation in exterior walls, vented attics, and unvented attics with air-permeable insulation.
10	**Vapor Retarder** – 150.0(g)2: Class I or II vapor retarder installed on the earth floor of unvented crawlspaces in Climate Zones 1-16.
11	**Vapor Retarder** – 150.0(g)3: Class I or II vapor retarder installed on the earth floor of controlled ventilation crawlspaces.
12	**Heated Slabs** - 110.8(g): All heated slabs shall be insulated as required. • Insulation shall be installed from the top of the slab, down 16 inches or to the frost line, whichever is greater. Climate zones 1-15 require R-5, climate zone 16 requires R-10. • Alternatively, vertical insulation from top of slab at inside edge of outside wall down to the top of the horizontal insulation. Horizontal insulation from the outside edge of the vertical insulation extending 4 feet toward the center of the slab in a direction normal to the outside of the building in plan view. Climate zones 1-15 require R-5, climate zone 16 requires R-10 vertical and R-7 horizontal.
The responsible person's signature on this compliance document affirms that all applicable requirements in this table have been met.	

H. INSTALLED INSULATION	
01	Installed insulation R-values are the same or greater than listed on the CF1R.
02	No gaps or voids between the insulation and framing.
03	No gaps between the sides or ends of batt insulation.
04	Loose-fill insulation must be installed to the minimum installed weight per square foot (density) of the manufacturer's cut sheet for the proposed R-value.
05	Batt insulation is not compressed (no stuffing of the insulation into the cavity) and is installed to its full thickness.
06	Insulation is cut around obstructions such as electrical boxes.
07	Batt insulation is delaminated around all plumbing and electrical lines in ceilings, walls, and floors.
08	Band joists are insulated to the same R-value as the wall.
09	In all narrow cavities the insulation shall be cut to fit or filled with expanding foam.
10	Insulation was installed per manufacturer instructions.
The responsible person's signature on this compliance document affirms that all applicable requirements in this table have been met.	

CERTIFICATE OF INSTALLATION		CF2R-ENV-03-E
Insulation Installation		(Page 3 of 4)
Project Name:	Enforcement Agency:	Permit Number:
Dwelling Address:	City	Zip Code

I. WALL INSULATION	
01	When allowed by the manufacturer, low expanding foam shall be used to fill gaps and voids around windows and doors. If not, the cavity must be airtight and filled completely with insulation. Batt insulation must be cut to width. No stuffing allowed.
02	Install wall insulation before installing tubs, showers, and fireplaces.
03	Electric panels on walls separating conditioned and unconditioned space are sealed and insulated behind the panel with rigid insulation or expanding foam.
04	All walls of interior closets vented to the outside for HVAC or water heating equipment have the same R-value and air barrier as the exterior walls and ceiling. Doors are insulated and weather stripped.
05	Ducting is not allowed in exterior walls unless it is insulated to R-6 or greater, and the insulation and ducting are not crushed. Ducting is not allowed in 2x4 wall assemblies.
06	Corner channels, wall intersections, and double sided shear walls are insulated to the required R-value before enclosing the wall.
07	Insulation that does not fill the cavity is placed against the exterior air barrier.
08	Band joists are insulated to the same R-value as the walls.
The responsible person's signature on this compliance document affirms that all applicable requirements in this table have been met.	

J. CEILING/ROOF INSULATION	
01	Insulation extends to the outside edge of the exterior top plates and is flush against any ventilation dams/baffles.
02	Insulation is in direct contact with ceiling, so there are no gaps between the ceiling and the insulation.
03	For chimneys and flues, the insulation is in contact with the sheet metal collar.
04	Can lights are covered with insulation to the same depth as required by the CF1R for ceiling insulation. If not, an area weighted calculation is required to be turned in with this form (Form CF1R-ENV-02-E).
05	Walkways and mechanical platforms are insulated to the same R-value as required for the ceiling. If not, an area weighted calculation is required to be turned in with this form (Form CF1R-ENV-02-E).
06	Insulate soffits by adding an air barrier and covering with insulation, or insulate the entire soffit including floor and walls.
07	Knee walls and skylight shafts are insulated to the wall R-value and in full contact with the interior air barrier. If framing on these surfaces is laid flat batt insulation is cut to fit around the framing. Batt insulation is not allowed to be draped over the framing.
08	Attic access doors are insulated to the same R-value as the ceiling. The insulation is permanently attached using adhesive or mechanical fasteners.
09	Attic access must be surrounded with a dam at least the same depth as the insulation to prevent loss of ceiling insulation.
10	Batt insulation is cut to fit around cross bracings and truss webs in the attic.
The responsible person's signature on this compliance document affirms that all applicable requirements in this table have been met.	

K. RAISED FLOOR INSULATION	
01	Insulation is in full contact with subfloor.
02	Insulation hangers are spaced at 18 inches or less; insulation hangers must not compress insulation.
03	If netting or mesh is used, the cavity under the floor is filled and in contact with the subfloor.
04	If the basement is conditioned, the walls adjacent to the crawlspace must meet minimum wall R-value requirements. This includes framed stem walls, and vertical concrete retaining walls.
05	If access to the crawl space is from the conditioned area, the raised floor must have an airtight insulated access hatch.
The responsible person's signature on this compliance document affirms that all applicable requirements in this table have been met.	

L. FLOOR ABOVE GARAGE INSULATION	
01	Insulation must be in full contact with the subfloor if the air barrier is at the band joist at the garage/house wall.
02	Insulation hangers spaced at 18 inches or less; insulation hangers must not compress insulation.
03	If netting or mesh is used, the cavity under the floor is filled and in contact with the subfloor.
04	If the air barrier is at the perimeter of the garage, below the conditioned subfloor, the insulation is placed on the garage ceiling. The perimeter of the subfloor is also insulated.
The responsible person's signature on this compliance document affirms that all applicable requirements in this table have been met.	

CERTIFICATE OF INSTALLATION		CF2R-ENV-03-E
Insulation Installation		(Page 4 of 4)
Project Name:	Enforcement Agency:	Permit Number:
Dwelling Address:	City	Zip Code

M. CANTILEVERED FLOOR INSULATION	
01	Insulation is in full contact with the cantilevered subfloor. Insulation hangers are spaced at 18 inches or less; insulation hangers do not compress insulation.
02	If netting or mesh is used, the cavity under the floor is filled and in contact with the subfloor.
03	Sealed blocking is installed between joists where a wall rim joist would be located in the absence of a cantilever. Insulation is placed on both sides of this block.
The responsible person's signature on this compliance document affirms that all applicable requirements in this table have been met.	

N. ATTACHED PORCH ROOF INSULATION	
01	The exterior insulated wall at the intersection with the porch roof is fully insulated above, below, and behind the roof line.
02	Where truss framing is used, airtight blocking is installed at the top and bottom of each wall/roof section and insulated.
The responsible person's signature on this compliance document affirms that all applicable requirements in this table have been met.	

DOCUMENTATION AUTHOR'S DECLARATION STATEMENT

1. I certify that this Certificate of Installation documentation is accurate and complete.

Documentation Author Name:	Documentation Author Signature:
Documentation Author Company Name:	Date Signed:
Address:	CEA/HERS Certification Identification (If applicable):
City/State/Zip:	Phone:

RESPONSIBLE PERSON'S DECLARATION STATEMENT

I certify the following under penalty of perjury, under the laws of the State of California:

1. The information provided on this Certificate of Installation is true and correct.
2. I am eligible under Division 3 of the Business and Professions Code in the applicable classification to accept responsibility for the system design, construction, or installation of features, materials, components, or manufactured devices for the scope of work identified on this Certificate of Installation, and attest to the declarations in this statement (responsible builder/installer), otherwise I am an authorized representative of the responsible builder/installer.
3. The constructed or installed features, materials, components or manufactured devices (the installation) identified on this Certificate of Installation conforms to all applicable codes and regulations, and the installation conforms to the requirements given on the plans and specifications approved by the enforcement agency.
4. I reviewed a copy of the Certificate of Compliance approved by the enforcement agency that identifies the specific requirements for the scope of construction or installation identified on this Certificate of Installation, and I have ensured that the requirements that apply to the construction or installation have been met.
5. I will ensure that a registered copy of this Certificate of Installation shall be posted, or made available with the building permit(s) issued for the building, and made available to the enforcement agency for all applicable inspections. I understand that a registered copy of this Certificate of Installation is required to be included with the documentation the builder provides to the building owner at occupancy.

Responsible Builder/Installer Name:	Responsible Builder/Installer Signature:	
Company Name: (Installing Subcontractor or General Contractor or Builder/Owner)	Position With Company (Title):	
Address:	CSLB License:	
City/State/Zip:	Phone	Date Signed:

Instructions for ENV03

A. ROOF/CEILING INSULATION

1. I.D.: A label from the plans (e.g., A1.4 or Roof) documenting the location of the installed insulation.
2. Manufacturer and Brand: Indicate the manufacturer and brand of the product being installed.
3. Framing Material: Wood or Metal.
4. Framing Size: Indicate the framing size, type such as 2x4 or 2x6.
5. Frame Spacing: 16 or 24 (inches on center).
6. Insulation Type: List the type of insulation used, such as batt, loose fill, or SPF.
7. Cavity Insulation R-value: Indicate the cavity insulation R-value.
8. Insulation Depth: Indicate, in inches, the amount of insulation installed.
9. Above Deck R-Value: Indicate the R-value of continuous insulation, having no framing penetration.
10. Below Deck R-Value: Indicate the R-value of the continuous insulation being installed below the roof deck that has no framing penetration, installed below the roof deck.

B. WALL-INSULATION

1. I.D.: A label from the plans, (e.g., A1.4 or Wall1) documenting the location of the installed insulation.
2. Manufacturer and Brand: Indicate the manufacturer and brand of the product being installed.
3. Framing Material: Wood or Metal.
4. Framing Size: Indicate the framing size, such as 2x4 or 2x6.
5. Frame Spacing: 16 or 24 (inches on center), for SIPs indicate n/a.
6. Insulation Type: List the type of insulation used, such as batt, loose fill, or SPF.
7. Cavity Insulation R-value: Indicate the cavity insulation R-value.
8. Insulation Depth: Indicate, in inches, the amount of insulation installed.
9. Exterior Wall R-Value: Indicate the R-value of continuous insulation, having no framing penetration, installed on the outside of the wall.
10. Interior Wall R-Value: Indicate the R-value of continuous insulation, having no framing penetration, installed on the inside of the wall.

C. MASS – INSULATION

1. I.D.: A label from the plans (e.g., A1.4 or Wall1) documenting the location of the installed insulation.
2. Manufacturer and Brand: Indicate the manufacturer and brand of the product being installed.
3. Location: Indicate the location of the insulation, such as above grade, below grade, wall, or roof.
4. Mass Thickness: Indicate the thickness of the mass, in inches, the insulation is applied to.
5. Furring Strip Type/Depth: Indicate the type and thickness of furring material installed, such as wood/1.0 inch thick.
6. Insulation Type: List the type of insulation used, such as SPF, EPS, or EPDM.
7. Exterior Insulation R-Value: Indicate the R-value of continuous insulation, having no framing penetration, installed on the outside of the assembly.
8. Interior Insulation R-Value: Indicate the R-value of continuous insulation, having no framing penetration, installed on the inside of the assembly.

D. RAISED FLOOR-INSULATION

1. I.D.: A label from the plans (e.g., A1.4 or Floor1) documenting the location of the installed insulation.
2. Manufacturer and Brand: Indicate the manufacturer and brand of the product being installed.
3. Framing Material: Wood or Metal.
4. Framing Size: Indicate the framing size, such as 2x4 or 2x6.
5. Frame Spacing O.C: 16 or 24 (inches on center), for SIPs indicate n/a.
6. Insulation Type: List the type of insulation used, such as batt, loose fill, or SPF.
7. Cavity Insulation R-value: Indicate the cavity insulation R-value.
8. Insulation Depth: Indicate, in inches, the amount of insulation installed.
9. Exterior Floor R-Value: Indicate the R-value of continuous insulation, having no framing penetration installed on the outside of the floor.
10. Interior floor R-Value: Indicate the R-value of continuous insulation, having no framing penetration installed on the inside of the floor.

E. SLAB FLOOR/PERIMETER INSULATION

1. I.D.: A label from the plans (e.g., A1.4 or Slab Floor1) documenting the location of the installed insulation.
2. Manufacturer and Brand: Indicate the manufacturer and brand of the product being installed.
3. Floor Type: Indicate the type of floor type the insulation is being applied to, such as Heated Slab or Slab on Grade.
4. Insulation Type: List the type of insulation used, such as EPDM, Polyisocyanurate, or Polystyrene.
5. Insulation Depth: Indicate, in inches, the depth of insulation installed. Refer to F02 for additional information.
6. Insulation R-Value: Indicate the insulation R-value being installed vertically and horizontal horizontally (if applicable).
7. Vertical Insulation Length: Indicate in inches the length of the insulation being installed. Refer to F03 for additional information on installing both vertical and horizontal slab insulation
8. Horizontal Insulation Length: Indicate, in feet the length of the insulation installed from the outside edge of the vertical insulation to the center of the slab.

CERTIFICATE OF INSTALLATION		CF2R-ENV-04-E
Roofing-Radiant Barrier		(Page 1 of 4)
Project Name:	Enforcement Agency:	Permit Number:
Dwelling Address:	City	Zip Code

If more than one person has responsibility for installation of the items on this certificate, each person shall prepare and sign a certificate applicable to the portion of construction for which they are responsible. Alternatively, the person with chief responsibility for construction shall prepare and sign this certificate for the entire construction. The signer agrees that all applicable Mandatory Measures were met. Temporary labels are not to be removed before verification by the building inspector.

A. RADIANT BARRIER

01	Brand Name and product number	
02	Installation Type	
03	Total Attic Area (ft^2)	

B. SCHEDULE OF LOWER VENTS

The Net Free Area (NFA) of a manufactured product is stated on the packaging or on the manufacturer's specification data sheet. For non-manufactured products, assume that the net free area is one third of the total aperture area.

01	02	03	04
Type of Vent For instance, eyebrow vent, eave vent, round vent	**NFA Per Vent (in^2) (Manufacturer's Specification Sheet)**	**Number of Vents Installed**	**Total NFA Per Vent Type (in^2)**

C.SCHEDULE OF UPPER VENTS

The Net Free Area of a manufactured product is stated on the packaging or on the manufacturer's specification data sheet. For non-manufactured products, assume that the net free area is one third of the total aperture area.

01	02	03	04
Type of Vent For instance, eyebrow vent, eave vent, round vent	**NFA Per Vent (in^2) (Manufacturer's Specification Sheet)**	**Number of Vents Installed**	**Total NFA Per Vent Type (in^2)**

CERTIFICATE OF INSTALLATION		CF2R-ENV-04-E
Roofing-Radiant Barrier		(Page 2 of 4)
Project Name:	Enforcement Agency:	Permit Number:
Dwelling Address:	City	Zip Code

D. REQUIRED VENT AREA

01	Combined NFA of installed upper and lower vents (in^2)	
02	Minimum required combined NFA of upper and lower vents (in^2)	
03	NFA of installed upper vents (in^2)	
04	Minimum required NFA of upper vents (in^2)	

E. RADIANT BARRIER AND ATTIC VENTILATION – ADDITIONAL REQUIREMENTS

Radiant Barrier	
01	Radiant barrier must be installed on all vertical surfaces in the attic including gable ends.
02	The emittance of the radiant barrier shall be less than or equal to 0.05 as tested with ASTM C1371, or E408.
03	The product shall meet all requirements for California certified insulation materials [radiant barriers] of the Department of Consumer Affairs, Bureau of Home Furnishings and Thermal Insulation, as specified by CCR, Title 24, Part 12, Chapter 12-13, Standards for Insulating Material
04	When determining the Total Attic Area, the area over unconditioned spaces such as the garage is included when the attic spaces are connected.
Lower Vents	
05	Lower vents are within one foot of the eave.
Upper Vents	
06	Upper vents are within three feet of the ridge
Vent Area	
07	The NFA of upper vents must be within required NFA range of upper vents Note: per Exception to R806.2 of the CBC Title 24, Part2, Vol.2.5, if the net free ventilating area is less than 1:150, then the upper ventilation must be at least 40% and no more than 50%. Part 2 contains additional requirements that must be met if the area is less than 1:150.
The responsible person's signature on this compliance document affirms that all applicable requirements in this table have been met.	

F. ROOFING PRODUCTS (COOL ROOF) INSTALLATION INFORMATION

01	02	03	04	05	06	07	08	09	10	11
				Installed				**Required**		
Roof Pitch	CRRC Product ID Number	Product Type	CRRC Listed Aged Solar Reflectance	Initial Solar Reflectance	Aged Solar Reflectance	Thermal Emittance	SRI	Aged Solar Reflectance	Thermal Emittance	SRI

G. ROOFING PRODUCTS (COOL ROOF) – ADDITIONAL REQUIREMENTS

01	Any roof area covered by building integrated photovoltaic panels and solar thermal panels are exempt from the above Cool Roof requirements.
02	Liquid field applied coatings must comply with installation criteria from section 110.8(i)4.
03	Mass roof 25 lb ft^2 or greater: Mass roofs are not required to have a cool roof even if the climate zone specifies minimum performance requirements.
The responsible person's signature on this compliance document affirms that all applicable requirements in this table have been met.	

CERTIFICATE OF INSTALLATION		CF2R-ENV-04-E
Roofing-Radiant Barrier		(Page 3 of 4)
Project Name:	Enforcement Agency:	Permit Number:
Dwelling Address:	City	Zip Code

CERTIFICATE OF INSTALLATION		CF2R-ENV-04-E
Roofing-Radiant Barrier		(Page 4 of 4)
Project Name:	Enforcement Agency:	Permit Number:
Dwelling Address:	City	Zip Code

DOCUMENTATION AUTHOR'S DECLARATION STATEMENT	
1. I certify that this Certificate of Installation documentation is accurate and complete.	
Documentation Author Name:	Documentation Author Signature:
Documentation Author Company Name:	Date Signed:
Address:	CEA/HERS Certification Identification (If applicable):
City/State/Zip:	Phone:

RESPONSIBLE PERSON'S DECLARATION STATEMENT

I certify the following under penalty of perjury, under the laws of the State of California:

1. The information provided on this Certificate of Installation is true and correct.
2. I am eligible under Division 3 of the Business and Professions Code in the applicable classification to accept responsibility for the system design, construction, or installation of features, materials, components, or manufactured devices for the scope of work identified on this Certificate of Installation, and attest to the declarations in this statement (responsible builder/installer), otherwise I am an authorized representative of the responsible builder/installer.
3. The constructed or installed features, materials, components or manufactured devices (the installation) identified on this Certificate of Installation conforms to all applicable codes and regulations, and the installation conforms to the requirements given on the plans and specifications approved by the enforcement agency.
4. I reviewed a copy of the Certificate of Compliance approved by the enforcement agency that identifies the specific requirements for the scope of construction or installation identified on this Certificate of Installation, and I have ensured that the requirements that apply to the construction or installation have been met.
5. I will ensure that a registered copy of this Certificate of Installation shall be posted, or made available with the building permit(s) issued for the building, and made available to the enforcement agency for all applicable inspections. I understand that a registered copy of this Certificate of Installation is required to be included with the documentation the builder provides to the building owner at occupancy.

Responsible Builder/Installer Name:	Responsible Builder/Installer Signature:	
Company Name: (Installing Subcontractor or General Contractor or Builder/Owner)	Position With Company (Title):	
Address:	CSLB License:	
City/State/Zip:	Phone	Date Signed:

Instructions

A. Radiant Barrier

1. Brand name and Product number: Indicate the brand name and product number of the product used.

2. Installation Type: Indicate the installation type from the following list:
   i. attached to underside of roof deck
   ii. attached to bottom of truss/rafters
   iii. attached between truss/rafters
   iv. draped over top of truss/rafters
   One of these four installation methods must be used; no other methods are allowed.

3. Total Attic Area (ft^2): Provide the total attic area over conditioned space. When determining the total attic area, the area over unconditioned spaces such as garage is included when the attic spaces are connected. At least one square foot of net free venting area is required for each 300 square feet of attic (1:300).

B. SCHEDULE OF LOWER VENTS

In table B, list all the lower vents that are installed in the attic(s) where a radiant barrier is required. Lower vents are within one foot of the eave.

For each type of vent, indicate:

1. Type of vent: For example, eyebrow vent, eave vent, or round vent.
2. NFA Per Vent: Net free area (NFA) of each individual vent (in2). The net free area (NFA) of a manufactured product is stated on the packaging or on the manufacturer's specification data sheet. For non-manufactured products, assume that the net free area is one third of the total aperture area.
3. Number of Vents Installed: Indicate how many vents of this type are installed in the attic(s).
4. Total NFA Per Vent Type: Calculated value; not a user input.

C. SCHEDULE OF UPPER VENTS

In table C., list all the installed upper vents in the same way as was done for lower vents (see section B. above). Upper vents are within three feet of the ridge.

D. REQUIRED VENT AREA

Table D. sets out the minimum required net free area (NFA) of total vents (upper plus lower), and the required NFA of upper vents. All values are calculated based on the inputs in Tables A, B, and C.

A minimum ratio between upper vents and lower vents must be achieved—the exception to R806.2 of the CBC Title 24, Part2, Vol.2.5, states if the net free ventilating area is less than 1:150, then the upper ventilation must be at least 40% and no more than 50%. Part 2 contains additional requirements that must be met if the area is less than 1:150.

E. RADIANT BARRIER AND ATTIC VENTILATION – ADDITIONAL REQUIREMENTS

Table E. lists additional requirements for Radiant Barriers, Lower Vents, Upper Vents, and Vent Area.

F. ROOFING PRODUCTS (COOL ROOF) INSTALLATION INFORMATION

1. Roof Pitch: Indicate whether the roof pitch is ≤2:12 or >2:12
2. CRRC Product ID Number: If a cool roof is installed, obtain the Product ID Number from the Cool Roof Rating Council's (CRRC) product packaging label or rated products directory (http://coolroofs.org/products/results).
3. Product Type: Indicate the product type being used.
4. CRRC Listed Aged Solar Reflectance: State whether the 3-year aged solar reflectance value of the product used is listed on the CRRC product packaging label or rated products directory—Yes or No.
5. Installed Initial Solar Reflectance: Indicate the initial solar reflectance value of the product used; obtained from the CRRC product packaging label or rated products directory.
6. Aged Solar Reflectance: Indicate the aged solar reflectance value of the product used; obtained from the CRRC product packaging label or label or rated product directory.
    - Note: If the 3-year aged value is not available then use the equation in Section 110.8(i)2 of the Energy Standards to calculate the 3-year aged solar reflectance. One can also use the "Calculated Aged Solar Reflectance" from the Solar Reflectance Index (SRI) Calculation Worksheet" available at the California Energy Commission's website.
7. Installed Thermal Emittance: Indicate the thermal emittance value of the product used; obtained from the CRRC product packaging label or rated products directory. This can be either the initial or aged value.
8. Installed SRI: If applicable, obtain the value of the product used from the CRRC rated products directory, or the "Solar Reflectance Index (SRI) Calculation Worksheet" available at the California Energy Commission's website.
9. Proposed Aged Solar Reflectance: Report the proposed aged solar reflectance value from the CF1R.
10. Proposed Thermal Emittance: Report the proposed thermal emittance value from the CF1R..
11. Proposed SRI: Report the proposed SRI value if applicable, from the CF1R-NCB, -ADD, or -ALT-01. .

G. ROOFING PRODUCTS (COOL ROOF) – ADDITIONAL REQUIREMENTS

This section contains additional requirements for Roofing Products. Other exceptions apply for additions and/or alterations.